

75 years
Quality through Experience

Company Profile

DÜCHTING PUMPEN

Gas Cleaning



Industrial Applications



Seawater Desalination



plant designer's business

operator's business

Mining



Product Range

- **Single-Stage** pumps
  - Nominal pressure up to **15 bar** (217 PSI)
  - Flow up to **20.000 m³/h** (88,000 gal/min)



- **Multi-Stage** pumps
  - Nominal pressure up to **250 bar** (3625 PSI)
  - Flow up to **3.500 m³/h** (15,400 gal/min)



- Pumps mainly designed for corrosive and abrasive media

Product Range

	Max Flow [m³/h] ([gal/min])	Max Head [bar] ([PSI])	Ph-Value	Max Density [g/l]	Max Particle Size [mm] ([inch])	Material
MC 	1,300 (5,700)	10 (145)	0-12	1,700	1 (0,04)	SICast
MCC 	20,000 (88,00)	6 (87)	0-12	1,700	1 (0,04)	SICast
ROWA-E 	12,000 (52,800)	10 (145)	0-14	1,700	50 (2)	various metals
ROWA 2/4S 	2,000 (8,800)	40 (580)	0-14	1,700	50 (2)	various metals
DH 	4,000 (17,600)	10 (145)	0-14	2,500	100 (4)	various metals
ROWA-HPB 	3,000 (13,200)	15/100 (217/1,450)	0-14	1,050	-	various metals
MHK/HK 	2,160 (9,500)	120 (2,320)	0-14	1,050	3 (0,12)	various metals
ROWA-HP 	3,500 (15,400)	100 (1,450)	0-14	1,050	-	various metals

Multi-Stage Pumps

High-Pressure pumps
for corrosive and abrasive media



LHK/MHK/HK ▶

ROWA-HP



▶

Multistage Pumps

Type **MHK/HK**





- Nominal pressure up to **160 bar** (2,320 PSI)
- Flow up to **2.160 m³/h** (9,500 gal/min)
- Available in almost all metallic materials from cast iron up to SUPER DUPLEX
- 4-pole pump (max. 1800 rpm) for liquids with slightly abrasive content
  - pH-Values 0-14
  - Maximum Density up to 1,050 g/l
- Horizontal and vertical arrangement

Multistage Pumps

Type **MHK/HK**





Design Features

- Axial thrust compensation by combination of balancing disc and balancing drum with wear indicator
  (> 40 bar (> 580 PSI))
- Shaft sealing by stuffing box or mechanical seals
- Flanges positionable in 90° steps; manufactured according to DIN/ASME
- Flanges at intermediate casings available
- One or two connective shaft ends available

Multi-Stage Pumps

DÜCHTING PUMPEN

Type **ROWA-HP**





- Nominal pressure up to **100 bar**
- (1,450 PSI)
- Flow up to **3.500 m³/h** (15,400 gal/min)
- Available in almost all metallic materials from cast iron up to SUPER DUPLEX
- 2-pole pump (up to 3.600 rpm) for highly corrosive liquids
  - pH-Values 0-14

DÜCHTING PUMPEN

Type **ROWA-HP**

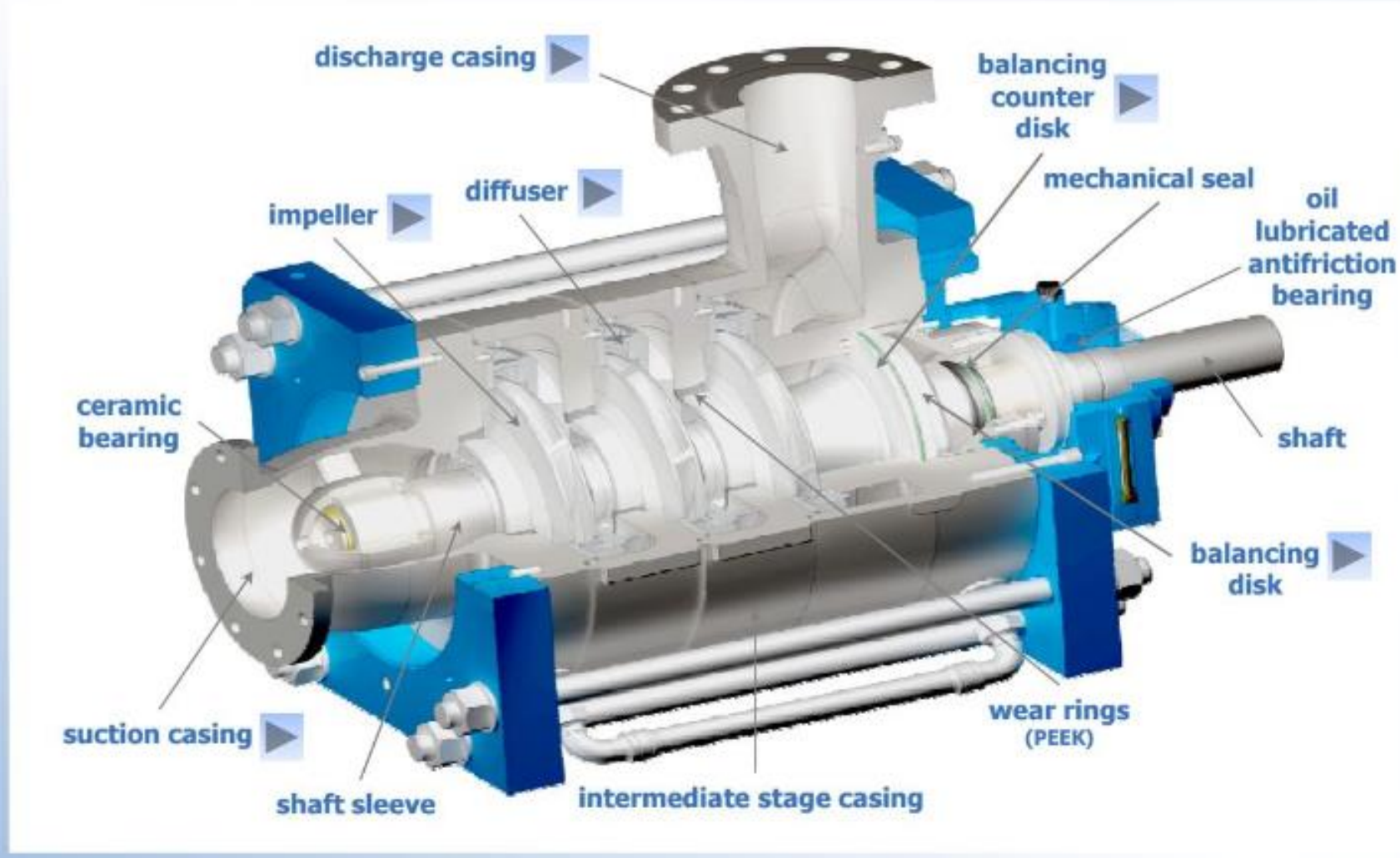

Seawater Desalination

Reverse Osmosis

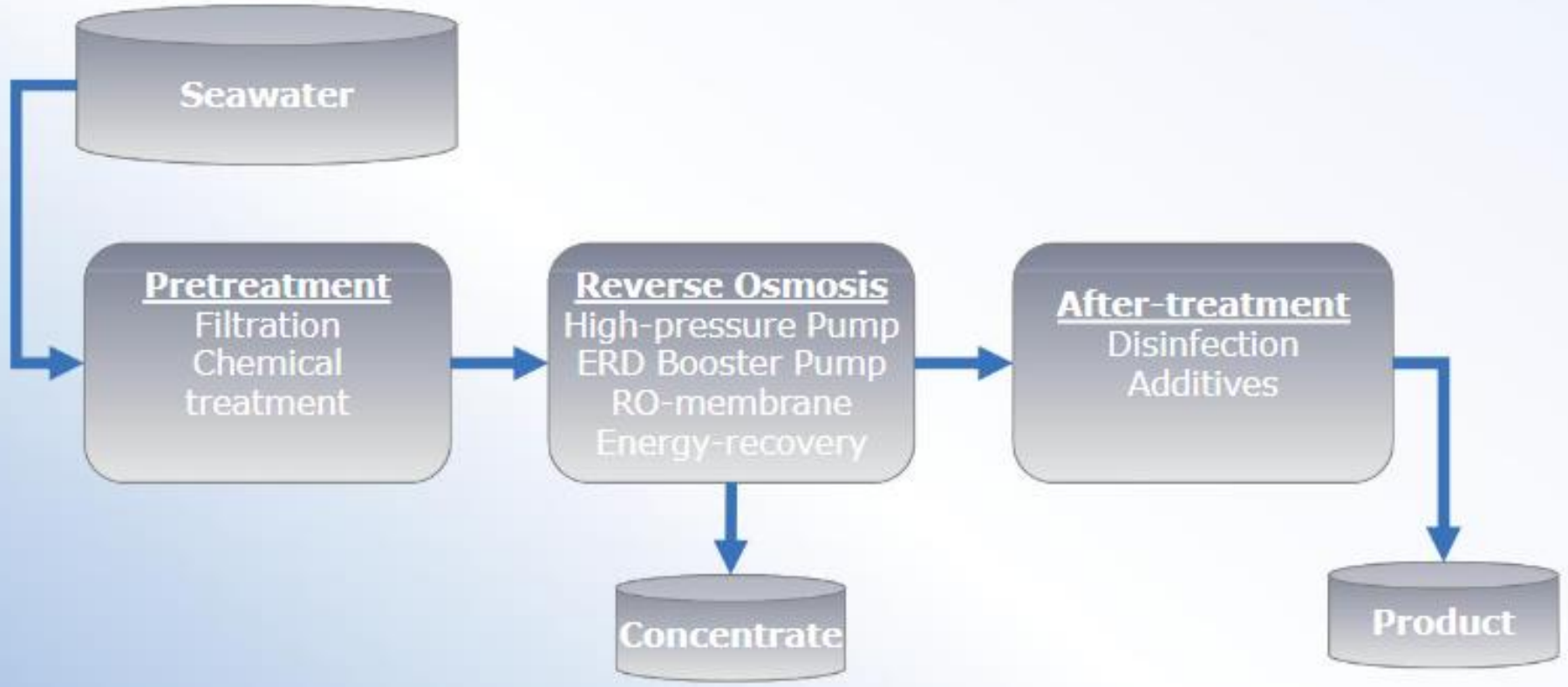

Seawater Desalination

Energy Recovery by **Pelton Turbine**

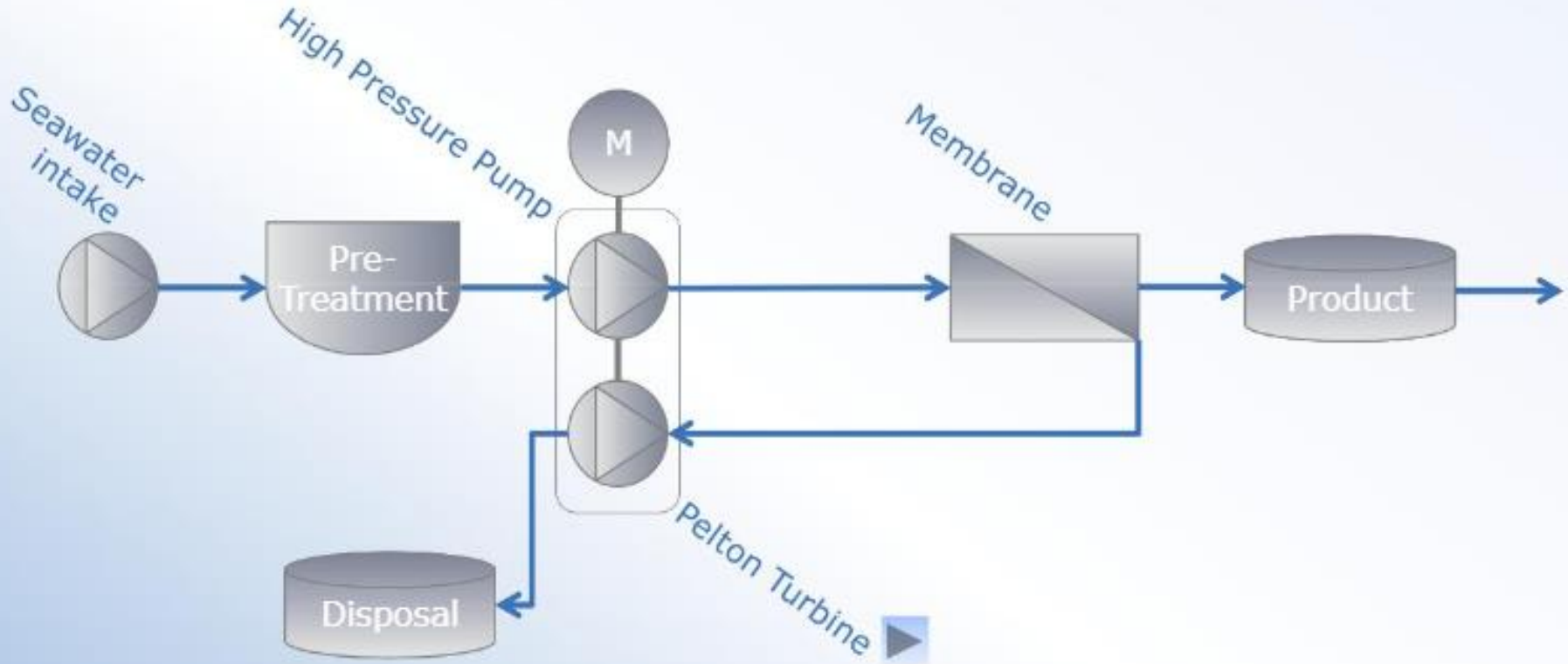

Seawater Desalination

Traditional Pump Unit

- Radial multistage pump arranged in the center with two conective shaft ends and variable nozzle connection
- Standard motor with one shaft end and normal air flow conditions
- Pelton Turbine with nozzle valve replaces concentrate control valve

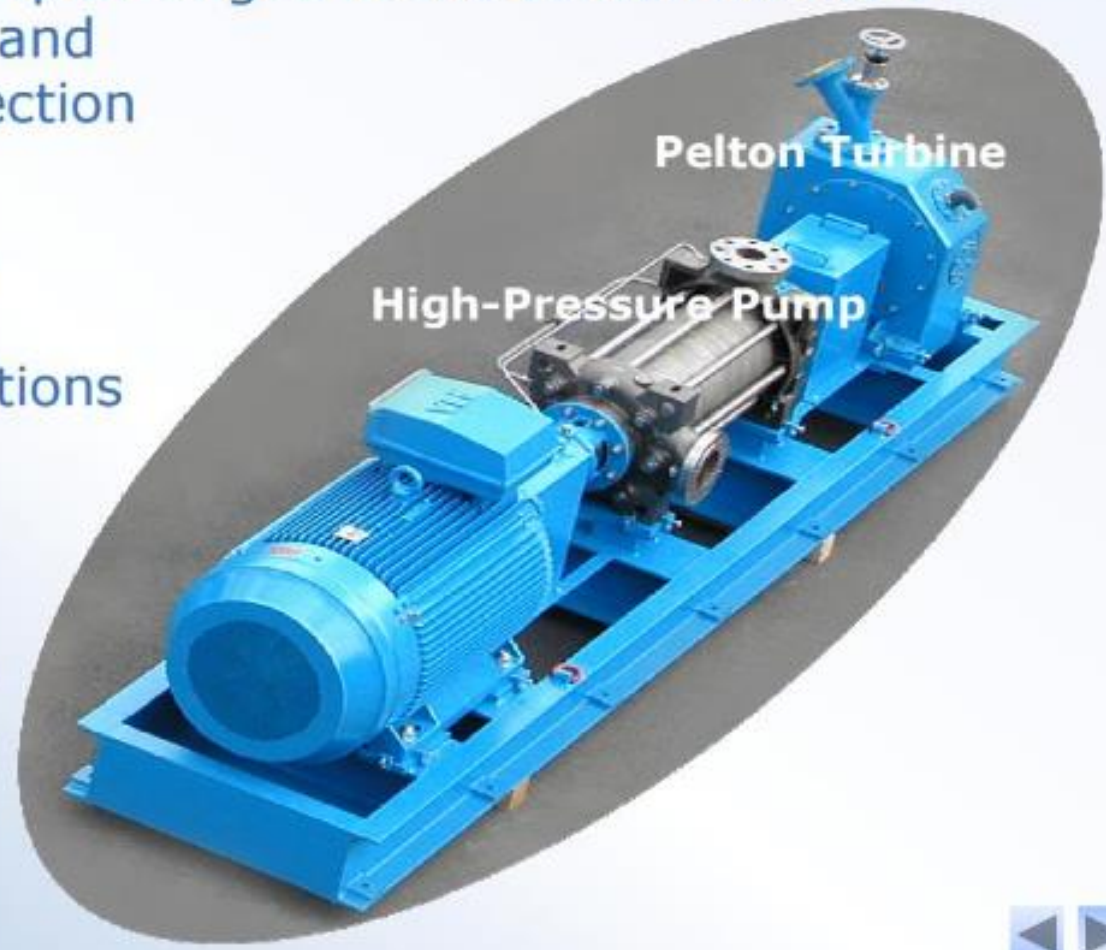

Seawater Desalination

Type ROWA-RT





- Simple and proven design
- Easy control by needle valve
  - Single, double or triple nozzle operation
- High efficiency along the complete operating range (>90%)
  - In combination with VFD speed control widest operating range
- Standard roller bearings outside the casing
- Variable flange location
- Material in DUPLEX or SUPER DUPLEX

Pelton Turbine type **ROWA-RT**

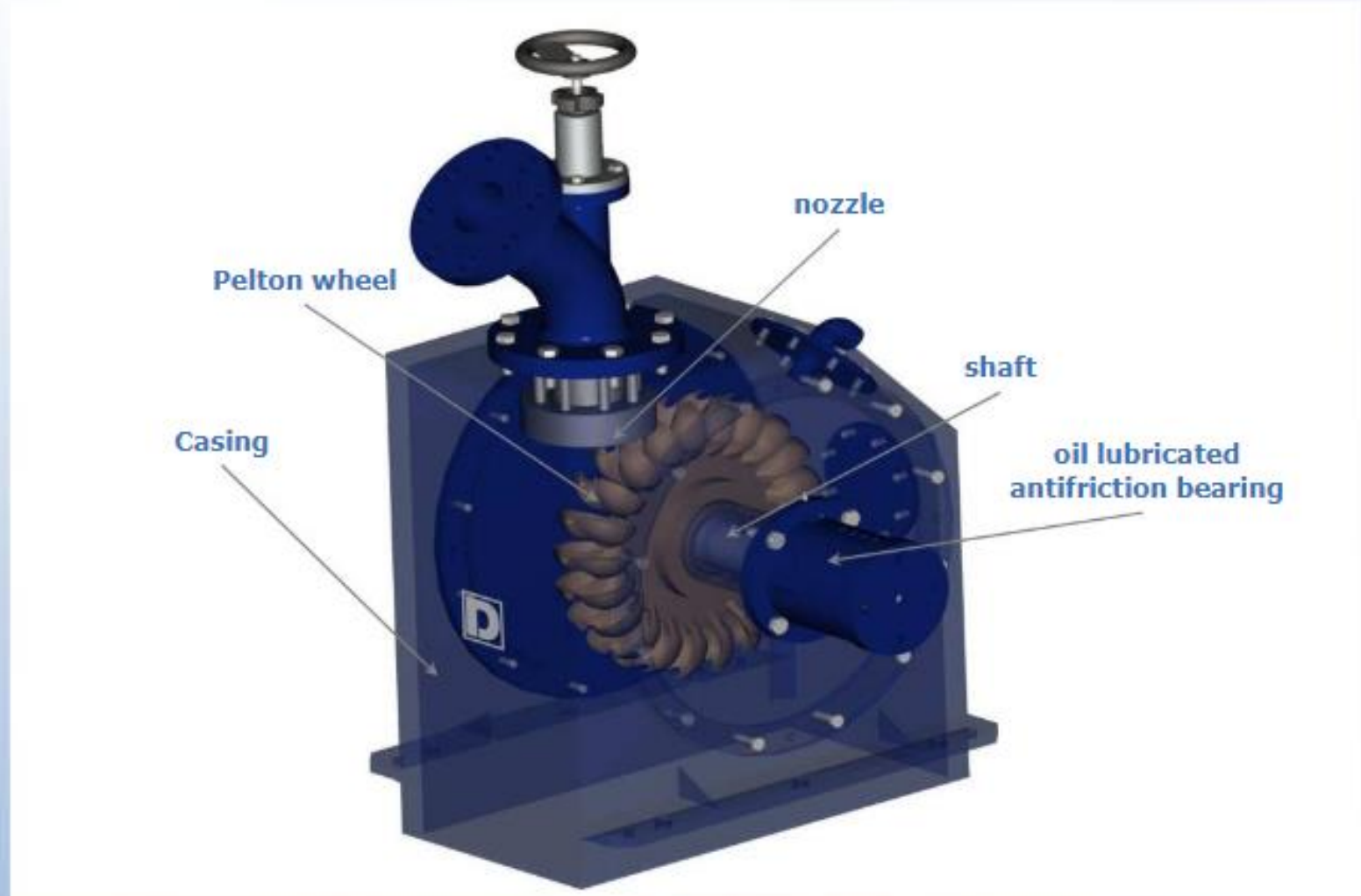

Seawater Desalination

Energy Recovery by **Pressure Exchanger** (PX)

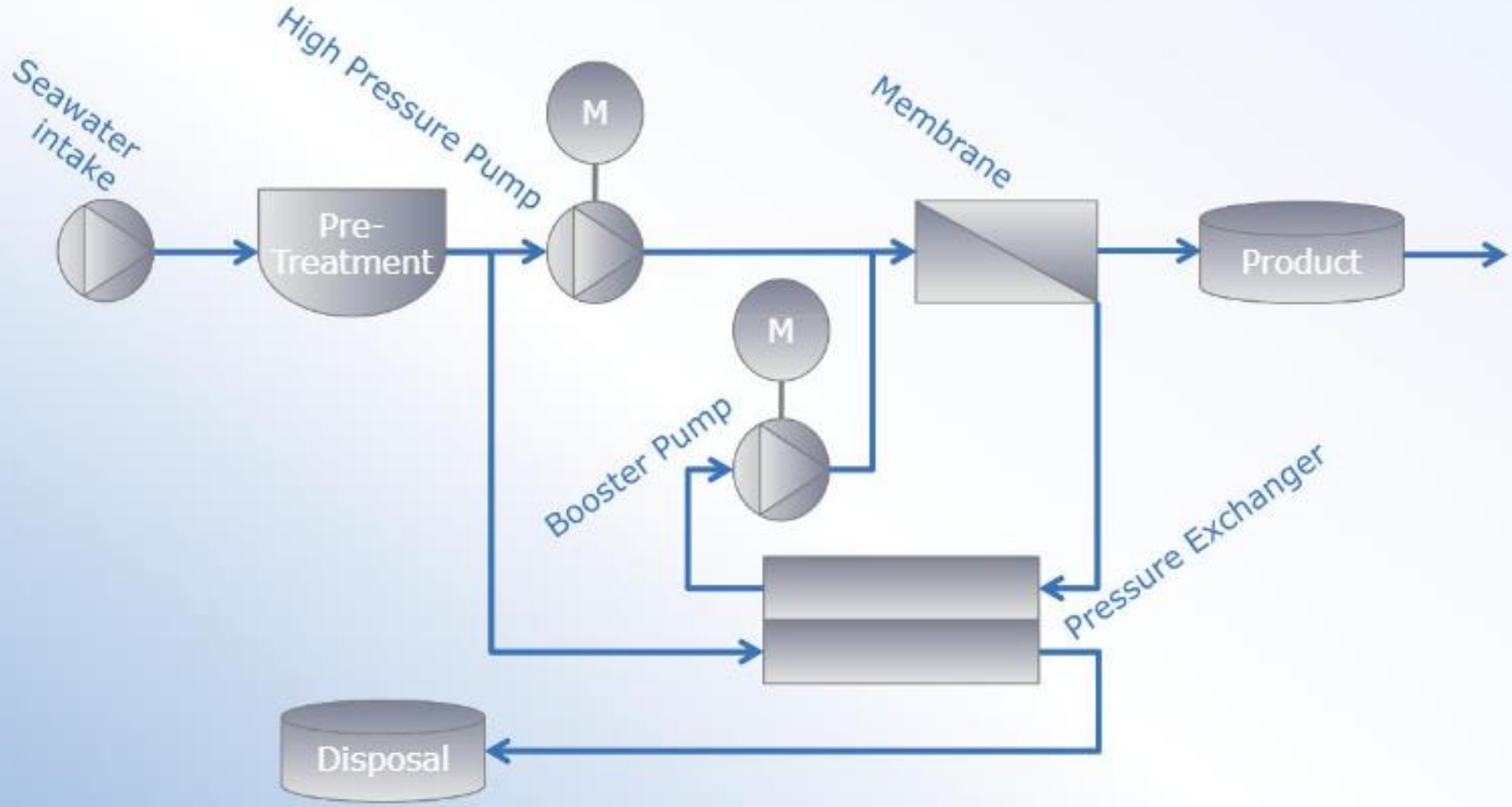

Seawater Desalination

Oman, Sohar





- 3 high-pressure pumps type ROWA-HP 150x5
- 3 pelton turbines type ROWA-RT
- Q=367 m³/h @ 62 bar
  (1,615 gal/min @ 899 PSI)
- Delivered in 2004

Seawater Desalination

Algeria, La Fontaine





- 9 high-pressure pumps type HP 100x10
- 9 pelton turbines type ROWA-RT
- Q=232 m³/h @ 72 bar
  (1,021 gal/min @ 1,044 PSI)
- Delivered in 2001

Seawater Desalination

Spain, Ibiza



- 3 high-pressure pumps type HK 15x5
- Q=313 m³/h @ 70 bar
  (1,378 gal/min @ 1,015 PSI)
- Delivered in 1992

Seawater Desalination

Egypt, South Sinai



- 3 high-pressure pumps type HK 100x7
- 3 pelton turbines type ROWA-RT
- Q=135 m³/h @ 62 bar
  (594 gal/min @ 899 PSI)
- Delivered in 1996 (today 14 similar pumps operating in 5 different SWRO plants in Egypt)

Seawater Desalination

Qatar, Pearl



- 5 high-pressure pumps type ROWA-HP 200x2
- 810 m³/h @ 42 bar
  (3,566 gal/min @ 609 PSI)
- Delivered in 2008

Seawater Desalination

China, Tianjin



- 8 high-pressure pumps type ROWA-HP 150x3
  - 605 m³/h @ 70 bar (2,663 gal/min @ 1,015 PSI)
- 8 high-pressure booster pumps type ROWA-HPB 250-380
  - 796 m³/h @ 6 bar (3,504 gal/min @ 87 PSI)
- Delivered in 2008

Seawater Desalination

Australia, Brisbane



- 5 high-pressure pumps type ROWA-HP 200x2
  - 833 m³/h @ 21 bar (3,667 gal/min @ 304 PSI)
- 5 high-pressure pumps type ROWA-HP 150x2
  - 400 m³/h @ 26 bar (1,761 gal/min @ 377 PSI)
- 5 high-pressure pumps type ROWA-HP 100x3
  - 162 m³/h @ 30 bar (713 gal/min @ 435 PSI)
- Delivered in 2010
- Online Condition Monitoring System

TYPE MCV

- Nominal pressure up to 8 bar (120 PSI)
- Flow up to 12.500 m³/h (55,000 gal/min)
- All main wetted parts are made of or non-metallic material (GRP)
- High wear and corrosion resistance
  - pH-Values 0-13
  - Maximum Density up to 1,700 g/l
- Mixed flow hydraulic

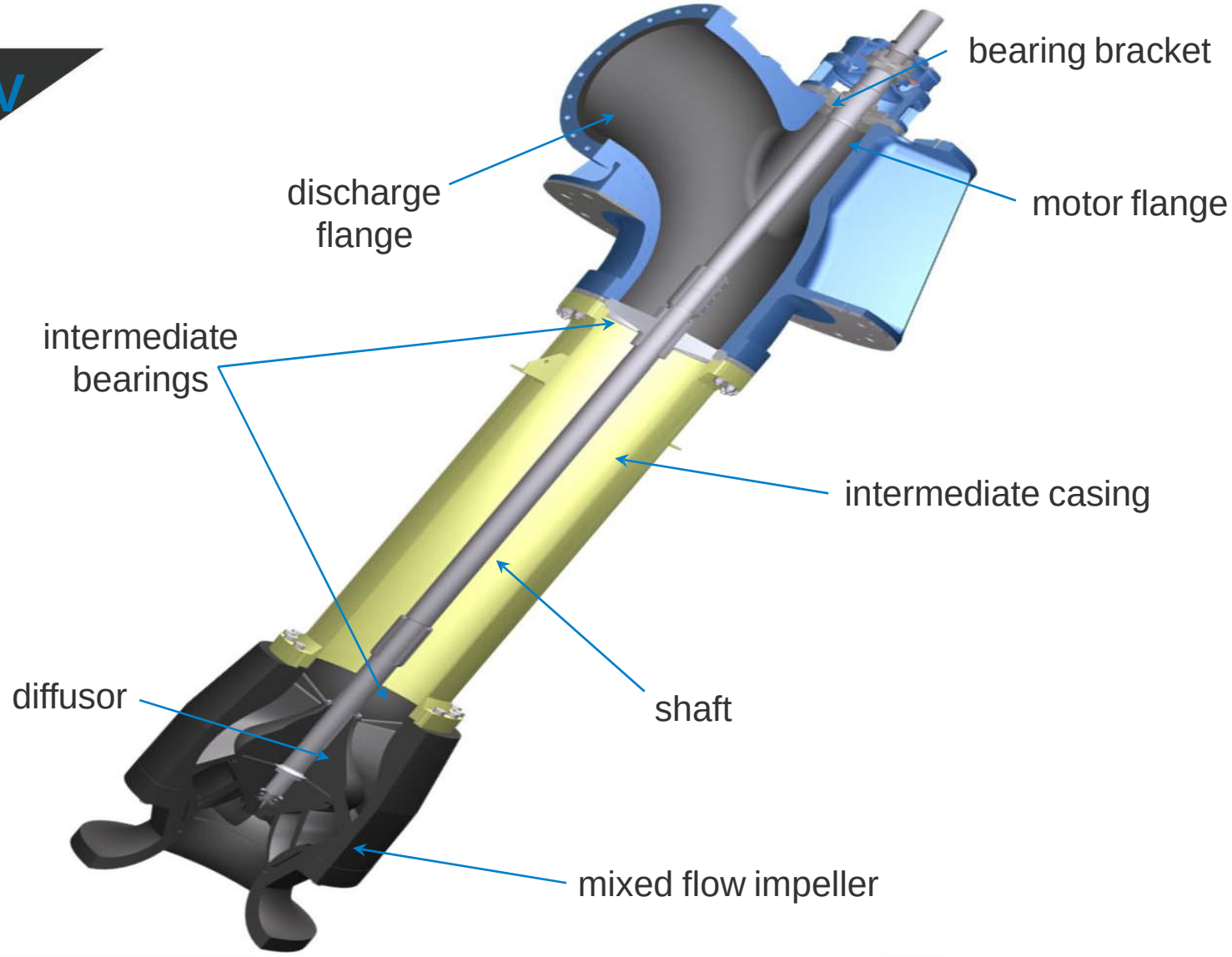

DÜCHTING PUMPEN

TYPE **WRX**

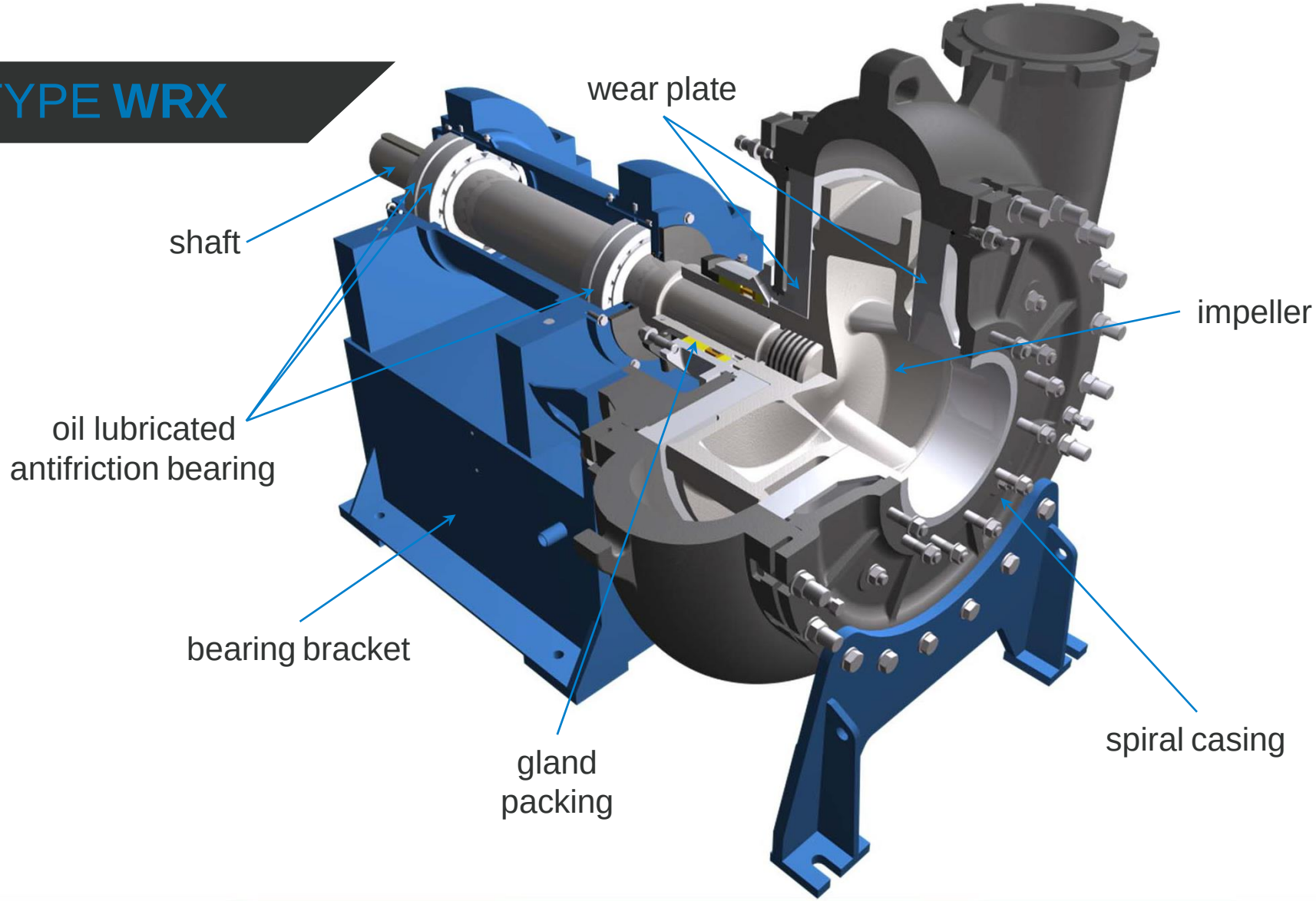

Company Profile

DÜCHTING PUMPEN

Gas Cleaning



plant designer's business

Industrial Applications



operator's business

Seawater Desalination



Mining



Single-Stage Pumps

Type **MCC**





- Nominal pressure up to **6 bar** (87 PSI)
- Flow up to **20.000 m³/h** (88,000 gal/min)
- All main wetted parts are made of SICast®
- High wear and corrosion resistance
  - pH-Values 0-12
  - Maximum Density up to 1,700 g/l
- Horizontal and vertical arrangement
- Extendend Warranties available

Single-Stage Pumps

Extended Warranty on MCCs

for seawater and gypsum slurry

- **10** years abrasion warranty on the **liner**
- **6** years abrasion warranty on the **impeller**
- **6** years abrasion warranty on the **wear plate**
- **Lifetime** anti-corrosion warranty on all SICast® -parts

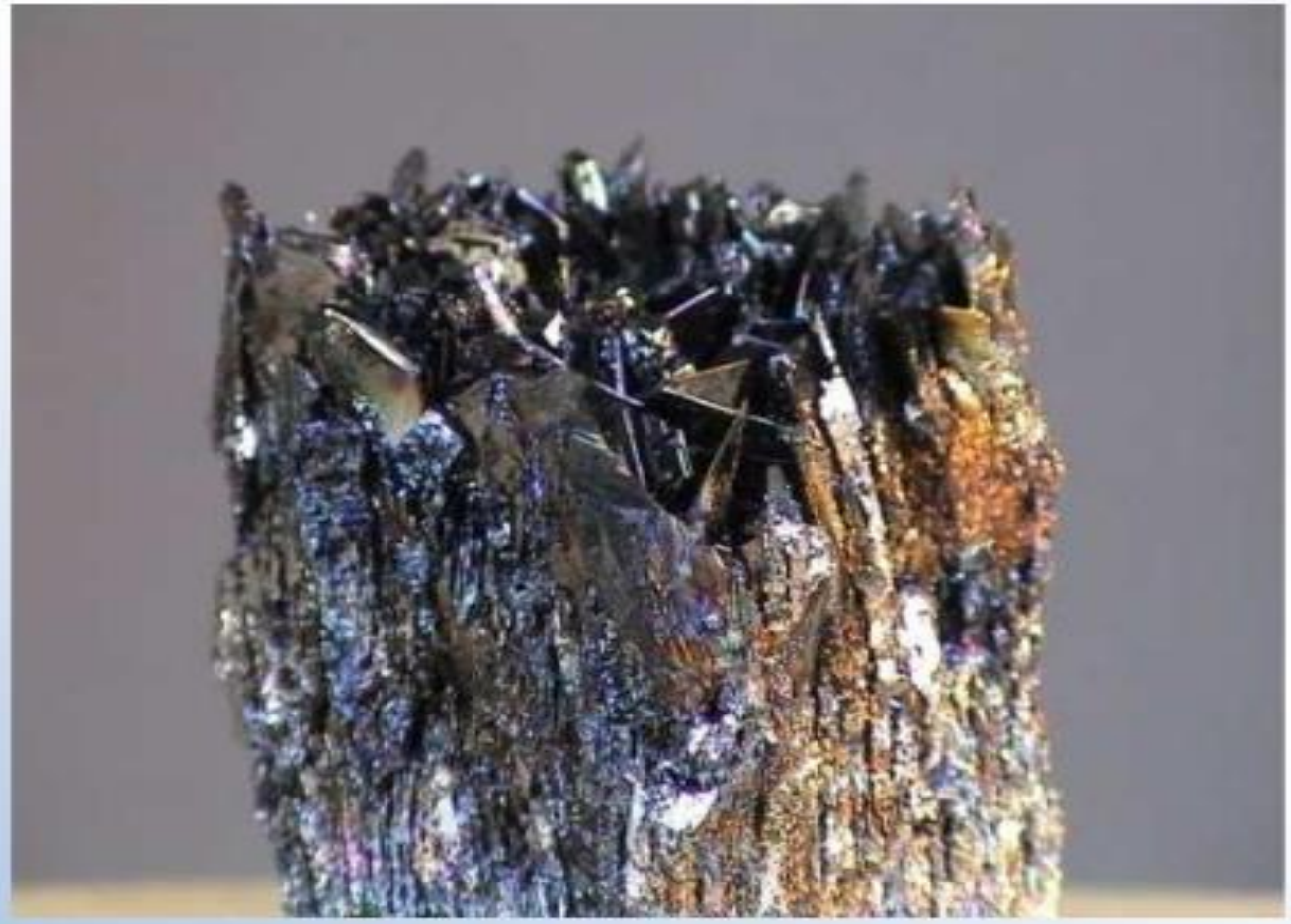

Hard as Diamond

The Material

Comparison between SICast® and other materials

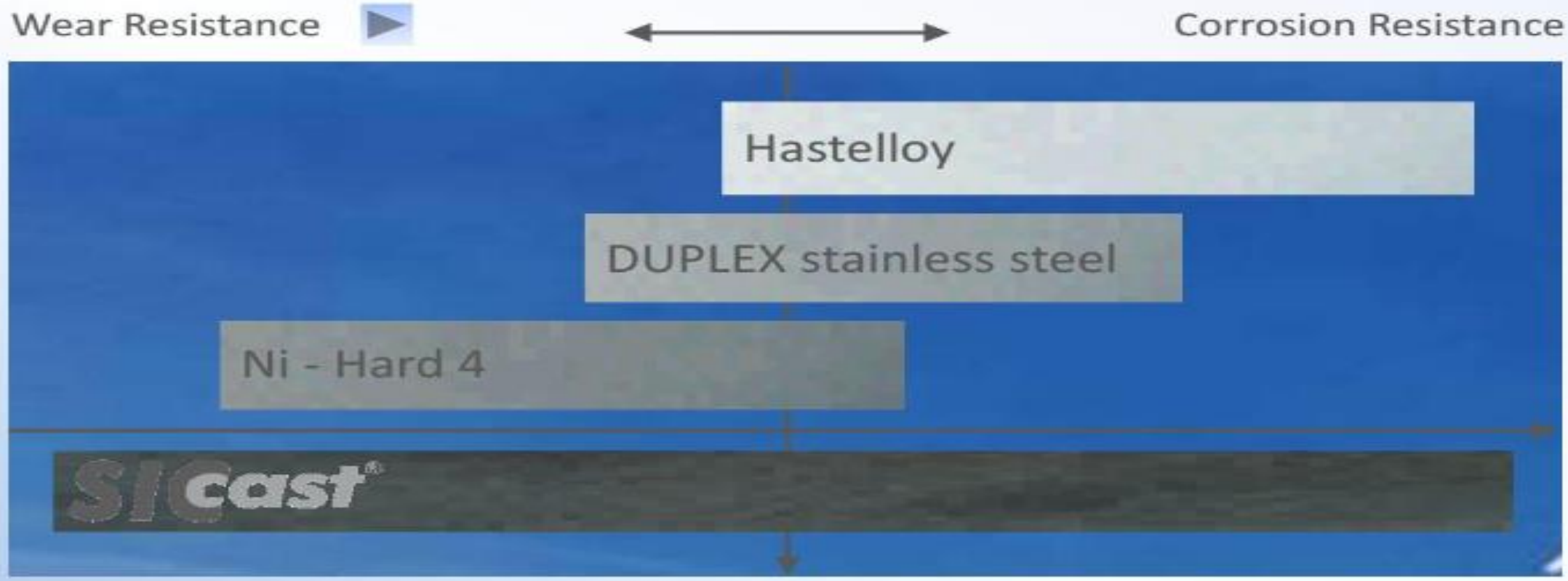

Special problem occurs with Erosion-Corrosion

The Material

Wear in Combination of Flow Velocity

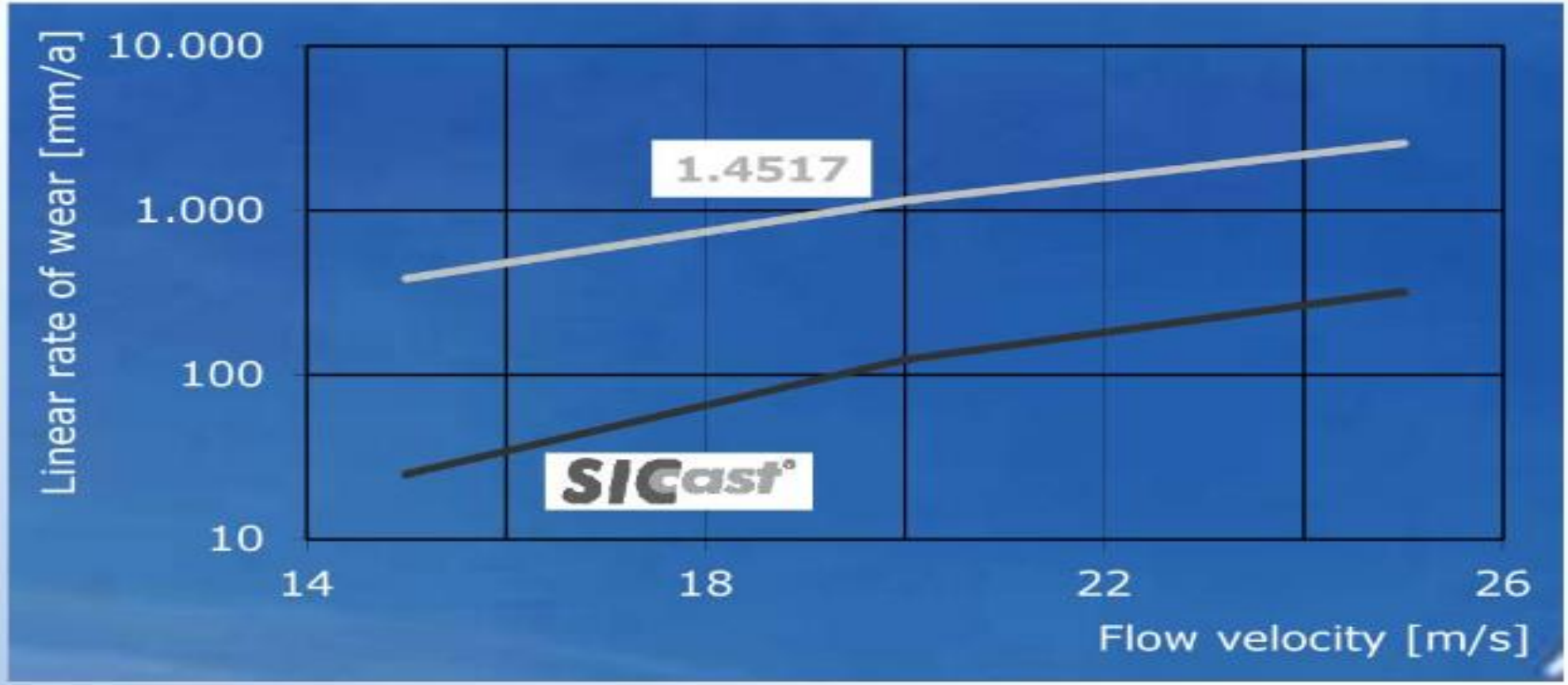

test medium: water-quartz-mixture
concentration: 30g/l
particle size: ~23µm

The Material

SICast®

Effects of the Erosion-Corrosion

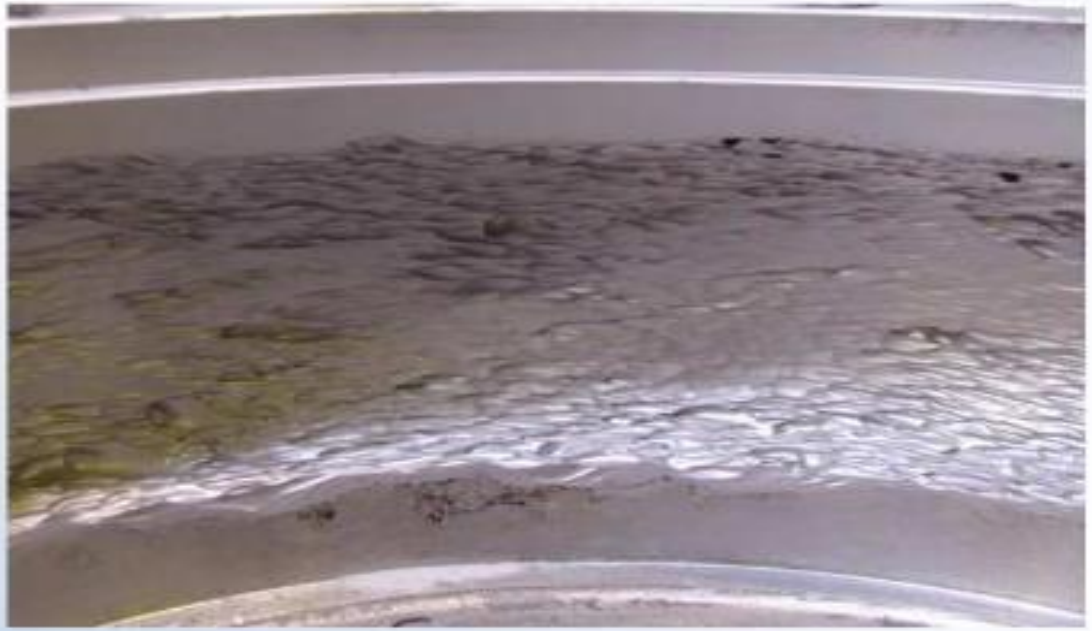



The Material

SICast®

Comparison of Erosion-Corrosion on DUPLEX and SICast® impellers

DUPLEX stainless steel



after **11.000h**
of operation

SICast®

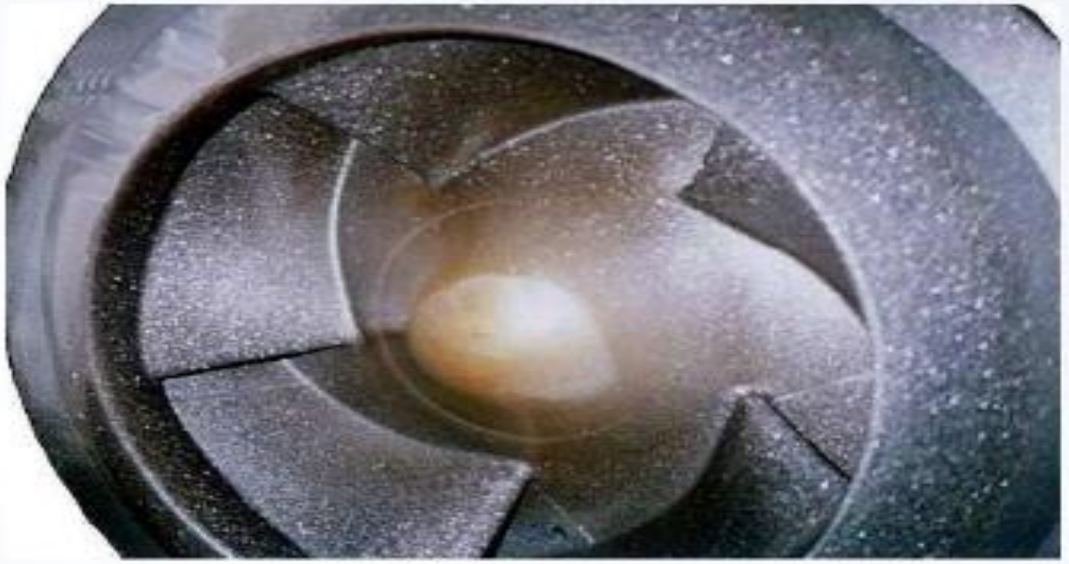

after **24.000h**
of operation

still in operation (85.000h)

Gas Cleaning

Spain, Soto





- Single-stage pump type
  MCC 600-850
- 4.926 m³/h @ 22 m, 542 rpm
  (21,688 gal/min @ 31.9 PSI)
- Up to 30.000 ppm of chlorides
- supplied in 2006

Gas Cleaning

Germany, Voerde



- Single-stage pump type
  MCC 800-1100
- 8.800 m³/h @ 25,4 m, 495 rpm
  (38,745 gal/min @ 36.8 PSI)
- Up to 30.340 ppm of chlorides
- supplied in 2005

Gas Cleaning

Czech Republic, Tusimice



- Single-stage pump type MCC 900-1180
- 11.000 m³/h @ 25,3 m, 424 rpm (48,431 gal/min @ 36.7 PSI)
- Up to 30.000 ppm of chlorides
- supplied in 2007

Gas Cleaning

USA, KU Brown



- Single-stage pump type
  MCC 1000-1250
- 15.352 m³/h @ 25,3 m, 388 rpm
  (67,592 gal/min @ 36.7 PSI)
- Up to 10.000 ppm of chlorides
- supplied in 2006