

75 years

Quality through Experience

75年的品質源於經驗

Company Profile 公司簡介

氣體淨化
Gas Cleaning

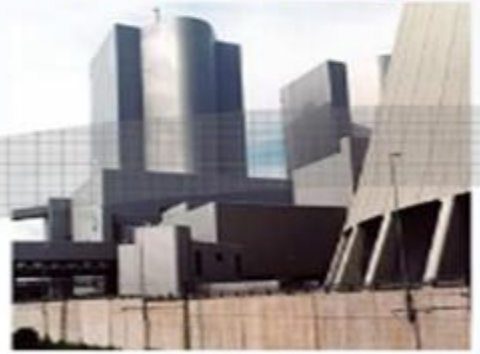

工業應用
Industrial Applications



海水淡化
Seawater Desalination



plant designer's business

operator's business

礦業
Mining

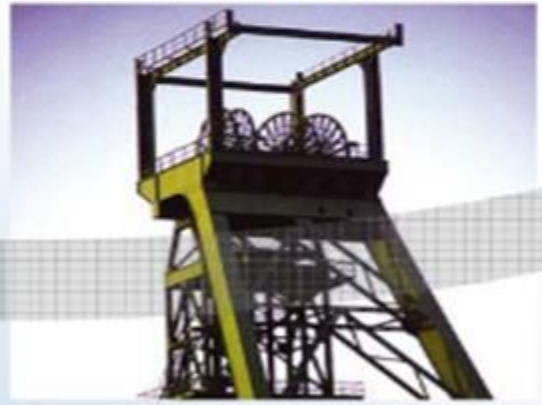

Product Range 產品範圍

- **Single-Stage** pumps 單段泵
  - Nominal pressure up to **15 bar** (217 PSI)
  - Flow up to **20.000 m³/h** (88,000 gal/min)

  壓力可達15 bar (217 PSI)

  流量可達20,000立方公尺/小時 (88,000加侖/分鐘)



- **Multi-Stage** pumps 多段泵
  - Nominal pressure up to **250 bar** (3625 PSI)
  - Flow up to **3.500 m³/h** (15,400 gal/min)

  壓力可達 250 bar (3,625 PSI)

  流量可達3,500立方公尺/小時 (15,400加侖/分鐘)



- Pumps mainly designed for corrosive and abrasive media

  主要設計用於腐蝕性及磨損性介質的泵

Product Range 產品範圍

DÜCHTING PUMPEN

		最大流量 Max Flow [m³/h] ([gal/min])	最大水頭 Max Head [bar] ([PSI])	pH值 Ph-Value	最大密度 Max Density [g/l]	最大粒徑 Max Particle Size [mm] ([inch])	材質 Material
MC		1,300 (5,700)	10 (145)	0-12	1,700	1 (0,04)	SICast
MCC		20,000 (88,00)	6 (87)	0-12	1,700	1 (0,04)	SICast
ROWA-E		12,000 (52,800)	10 (145)	0-14	1,700	50 (2)	various metals
ROWA 2/4S		2,000 (8,800)	40 (580)	0-14	1,700	50 (2)	various metals
DH		4,000 (17,600)	10 (145)	0-14	2,500	100 (4)	various metals
ROWA-HPB		3,000 (13,200)	15/100 (217/1,450)	0-14	1,050	-	various metals
MHK/HK		2,160 (9,500)	120 (2,320)	0-14	1,050	3 (0,12)	various metals
ROWA-HP		3,500 (15,400)	100 (1,450)	0-14	1,050	-	various metals

Multi-Stage Pumps 多段泵

High-Pressure pumps 高壓泵

for corrosive and abrasive media

用於腐蝕性及磨損性介質



LHK/MHK/HK ▶

ROWA-HP



▶

Multistage Pumps 多段泵

DÜCHTING PUMPEN

Type **MHK/HK**





- Nominal pressure up to **160 bar** (2,320 PSI)
  壓力可達160 bar (2,320 PSI)
- Flow up to **2.160 m³/h** (9,500 gal/min)
  流量可達2,160立方公尺/小時 (9,500 加侖/分鐘)
- Available in almost all metallic materials from cast iron up to SUPER DUPLEX
  適用於幾乎所有金屬材料，由鑄鐵到SUPER DUPLEX
- 4-pole pump (max. 1800 rpm) for liquids with slightly abrasive content
  用於液體的4極泵(最大 1,800 rpm) 含少量磨料
  - pH-Values 0-14 **pH值 0-14**
  - Maximum Density up to 1,050 g/l **最大密度達1,050 g/l**
- Horizontal and vertical arrangement
  水平及垂直排列

Multistage Pumps 多段泵

DÜCHTING PUMPEN

Type **MHK/HK**





Design Features 設計特點

- Axial thrust compensation by combination of balancing disc and balancing drum with wear indicator (> 40 bar (> 580 PSI))
  通過平衡盤和平衡鼓與磨損指示器的組合進行軸向推力補償
- Shaft sealing by stuffing box or mechanical seals
  利用填料箱或機械密封進行軸封
- Flanges positionable in 90° steps; manufactured according to DIN/ASME
  法蘭可90度定位； 根據 DIN/ASME 製造
- Flanges at intermediate casings available
  可提供中間外殼上的法蘭
- One or two connective shaft ends available
  提供一個或兩個連接軸端

Multi-Stage Pumps 多段泵

DÜCHTING PUMPEN

Type **ROWA-HP**





- Nominal pressure up to **100 bar**
- (1,450 PSI) 壓力可達 **100 bar (1,450 PSI)**
- Flow up to **3.500 m³/h** (15,400 gal/min)
  流量可達 **3,500**立方公尺/小時 **(15,400** 加侖/分鐘**)**
- Available in almost all metallic materials from cast iron up to SUPER DUPLEX
  適用於幾乎所有金屬材料，由鑄鐵到**SUPER DUPLEX**
- 2-pole pump (up to 3.600 rpm) for highly corrosive liquids **2**極泵**(**可達**3,600 rpm)**用於高腐蝕性液體。**pH**值 **0-14**
  - pH-Values 0-14

Multistage Pumps 多段泵

DÜCHTING PUMPEN

Type **ROWA-HP**

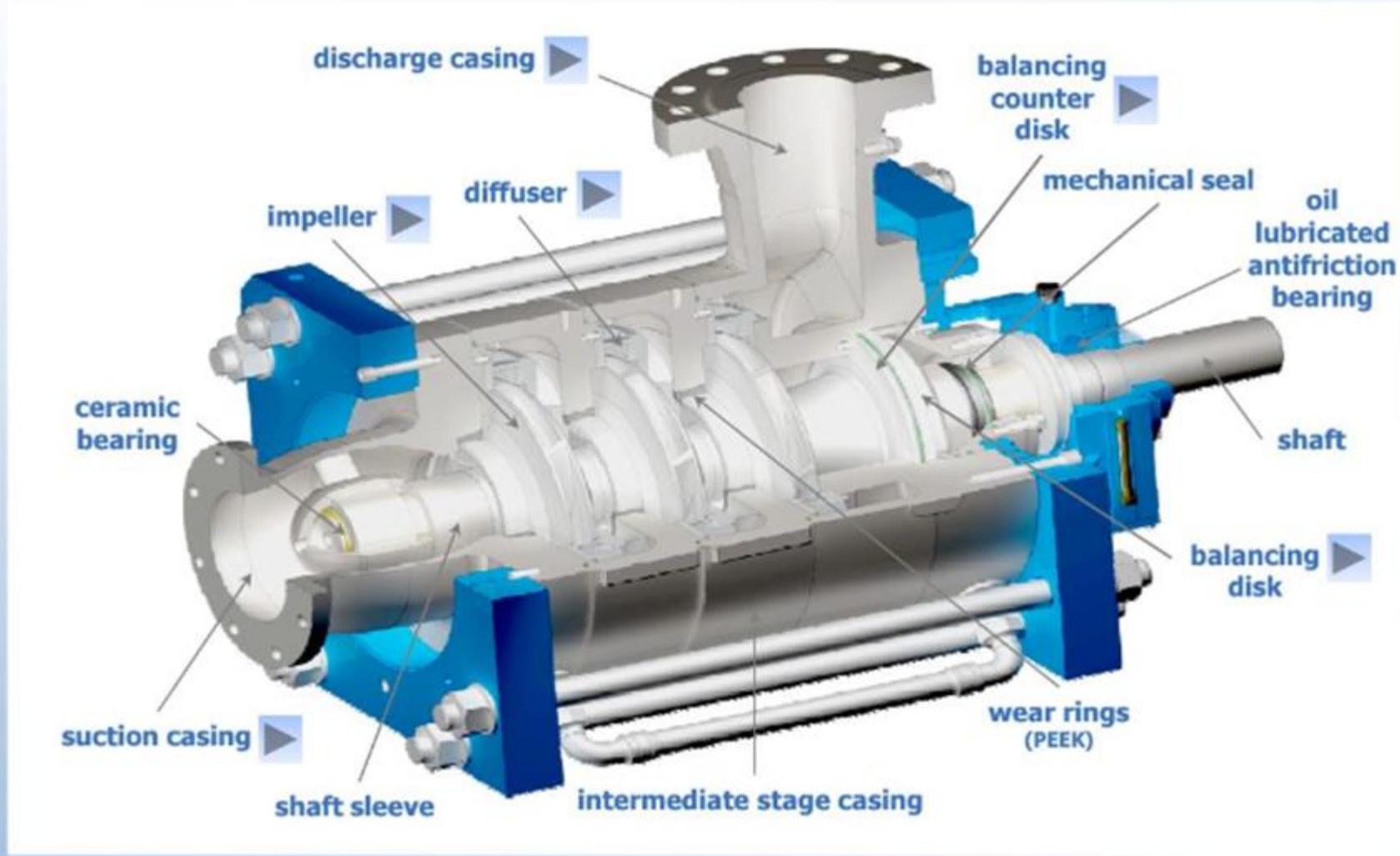

Seawater Desalination 海水淡化

Reverse Osmosis 逆滲透

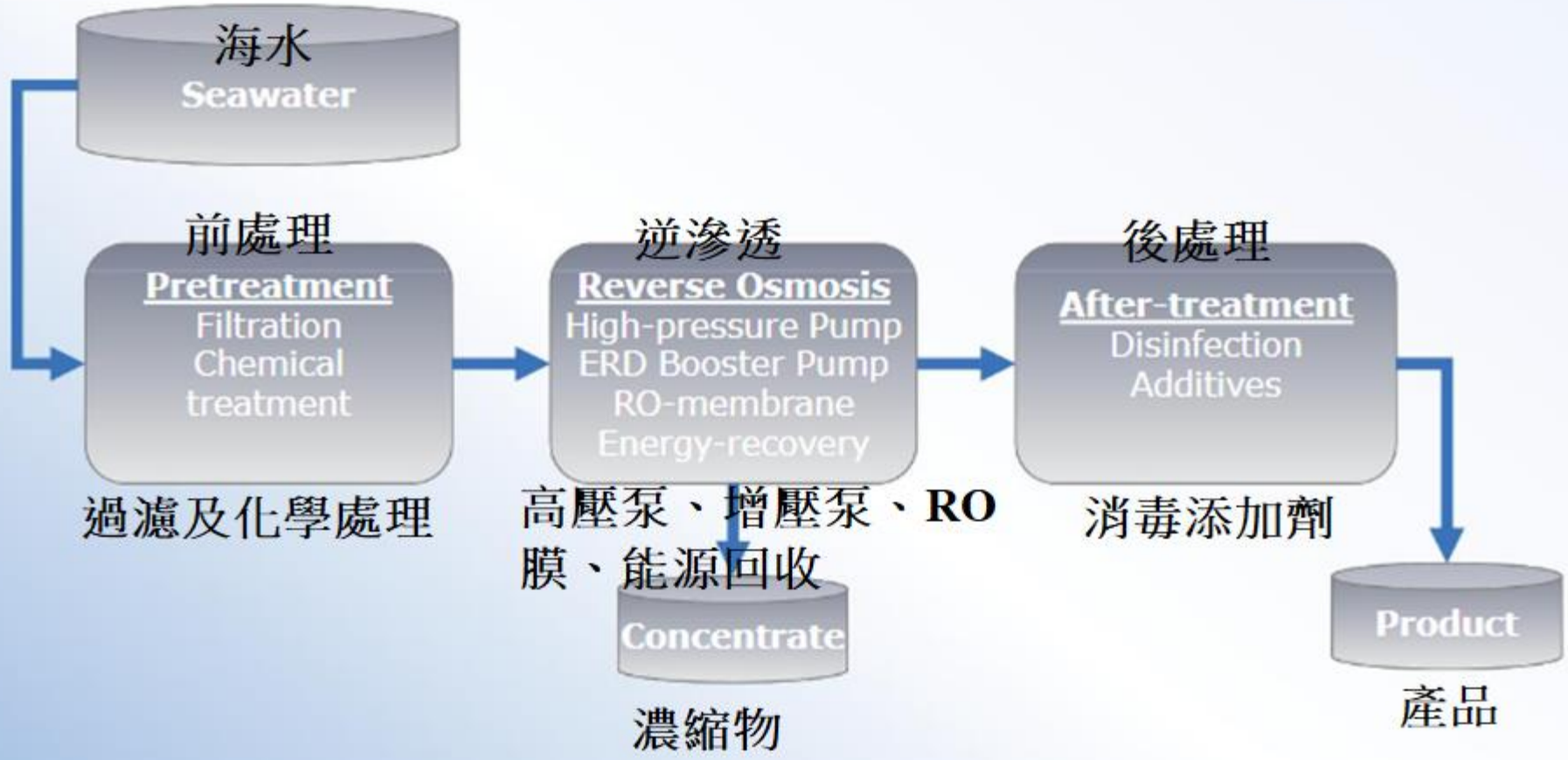

Seawater Desalination 海水淡化

Energy Recovery by **Pelton Turbine** Pelton渦輪回收能源

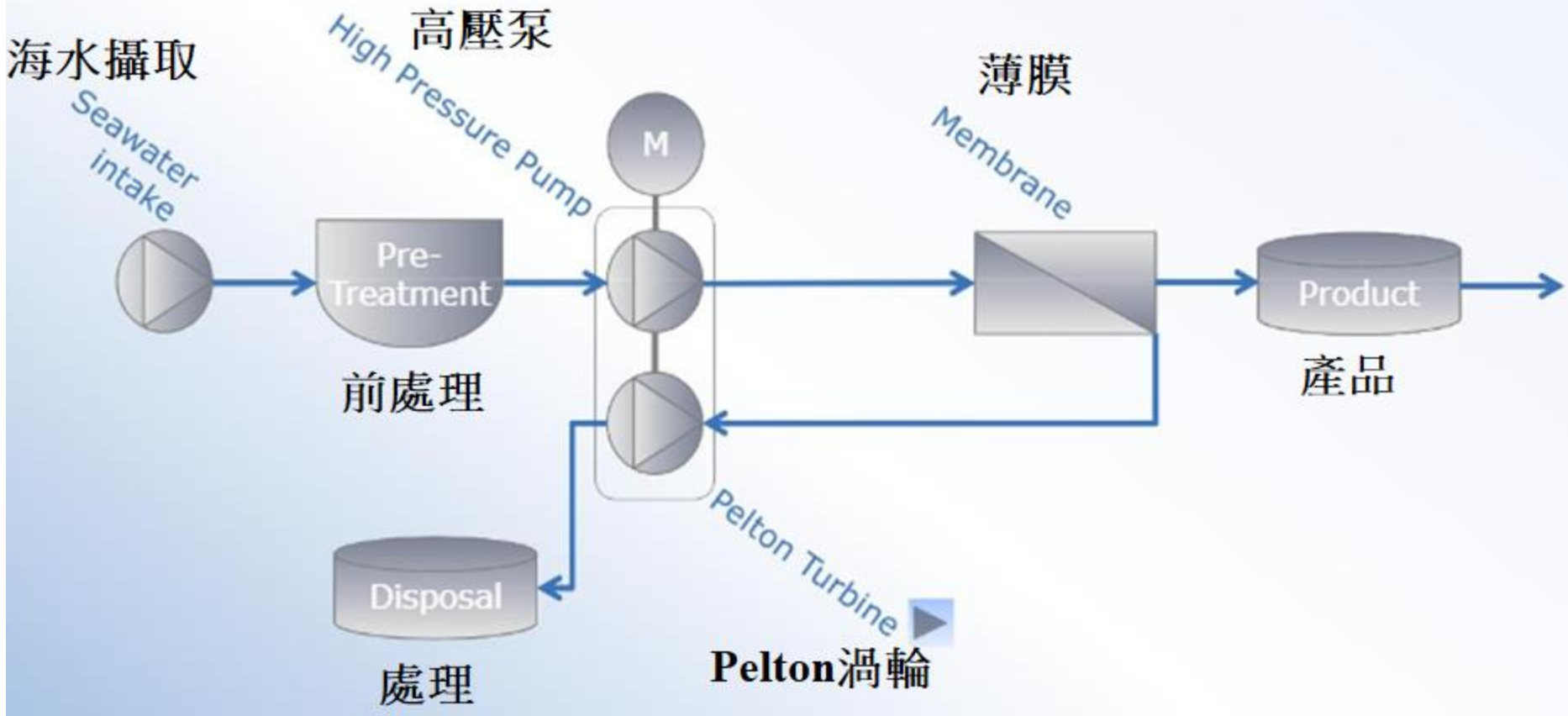

Seawater Desalination 海水淡化

DÜCHTING PUMPEN

Traditional Pump Unit 傳統泵

徑向多段泵位於中心，兩個連接的軸端和可變噴嘴連接

- Radial multistage pump arranged in the center with two conective shaft ends and variable nozzle connection

帶有一個軸端和正常氣流條件的標準馬達

- Standard motor with one shaft end and normal air flow conditions

- Pelton Turbine with nozzle valve replaces concentrate control valve

帶噴嘴閥的Pelton水輪機替代濃縮液控制閥

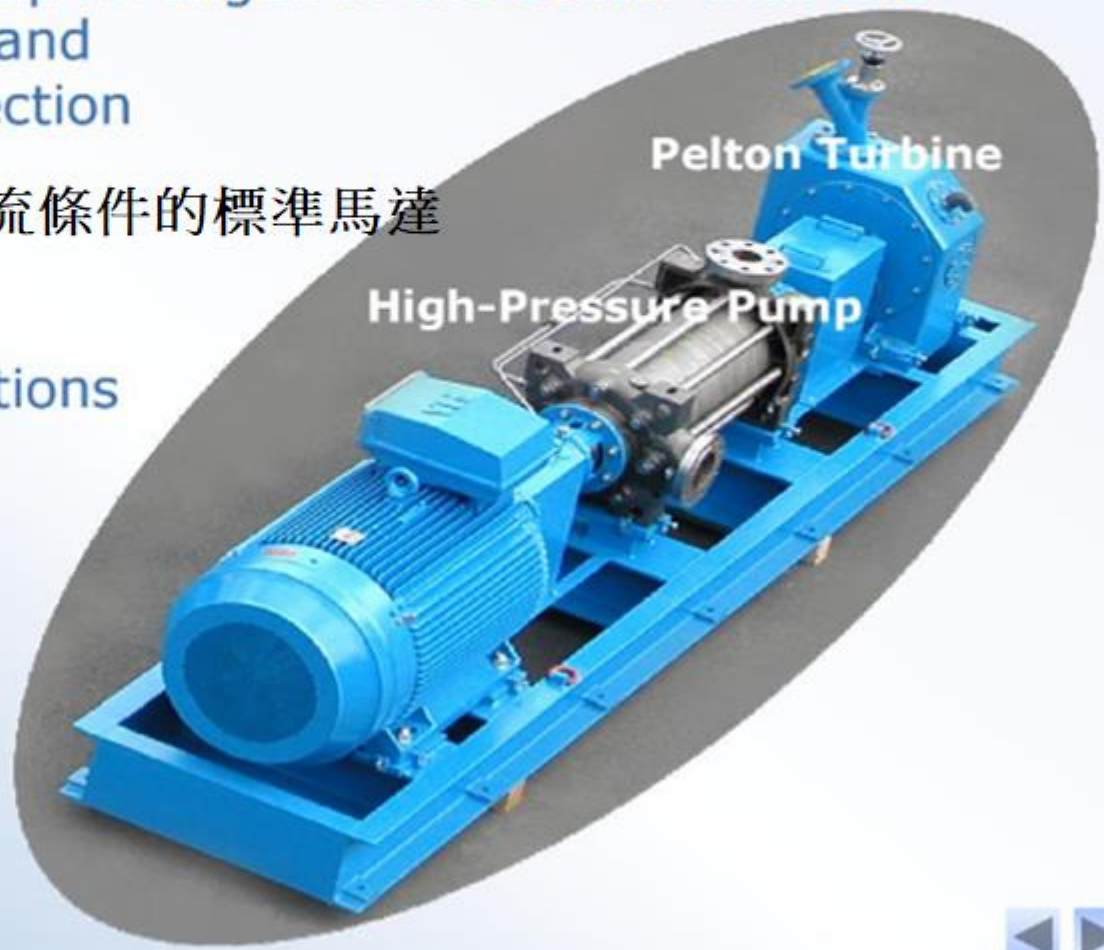

Seawater Desalination 海水淡化

DÜCHTING PUMPEN

Type ROWA-RT





- Simple and proven design
  簡單且經過驗證的設計
- Easy control by needle valve 以針閥輕鬆控制
  - Single, double or triple nozzle operation
    單、雙、三噴嘴操作
- High efficiency along the complete operating range (>90%) 整機操作效率大於90%
  - In combination with VFD speed control widest operating range
    結合 VFD 速度控制最寬的工作範圍
- Standard roller bearings outside the casing
  外殼外的標準滾子軸承
- Variable flange location
  可變法蘭位置
- Material in DUPLEX or SUPER DUPLEX
  材質為DUPLEX 或 SUPER DUPLEX

Pelton Turbine type **ROWA-RT**

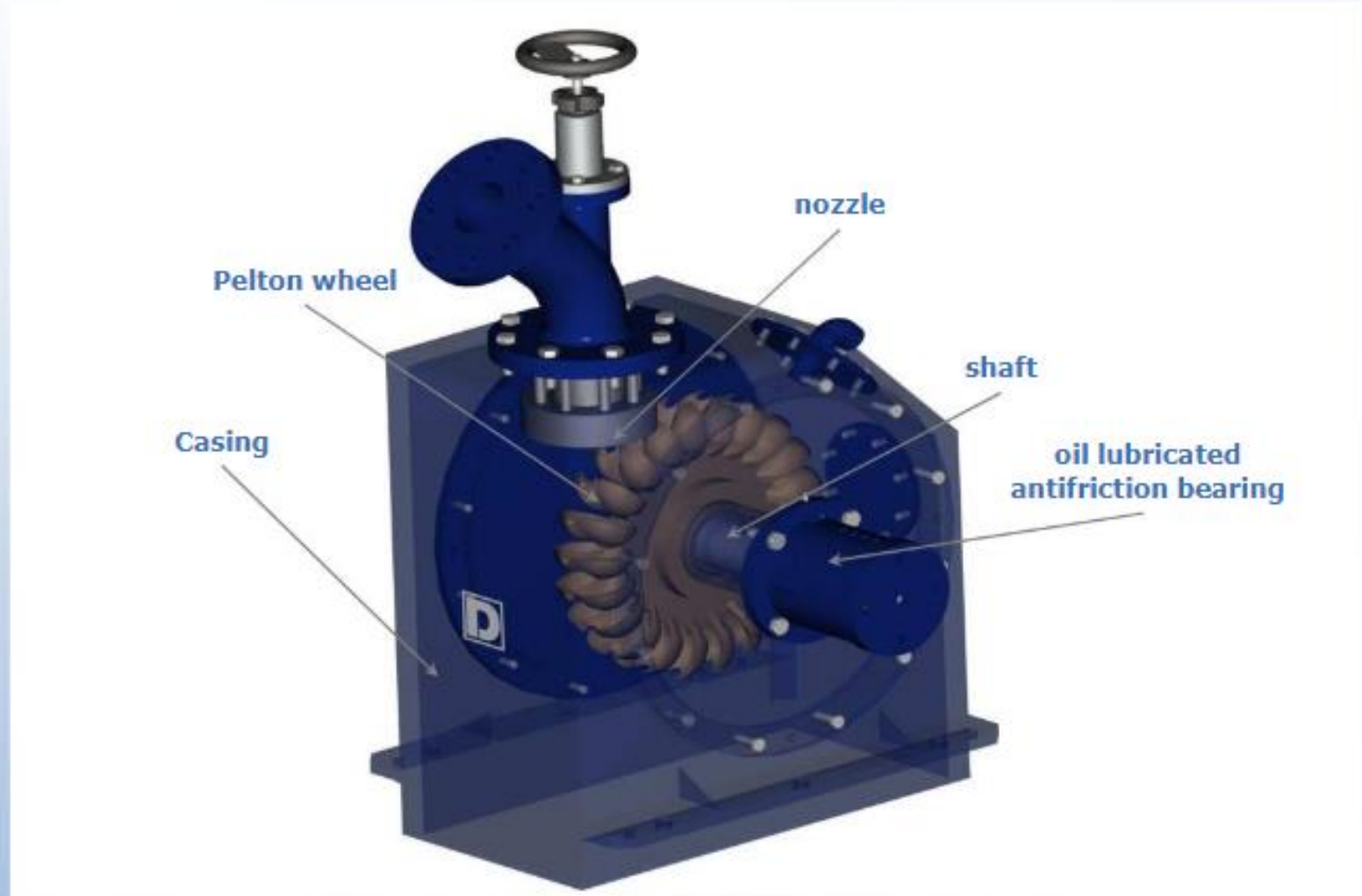

Seawater Desalination 海水淡化

DÜCHTING PUMPEN

利用壓力交換器進行能源回收
Energy Recovery by **Pressure Exchanger** (PX)

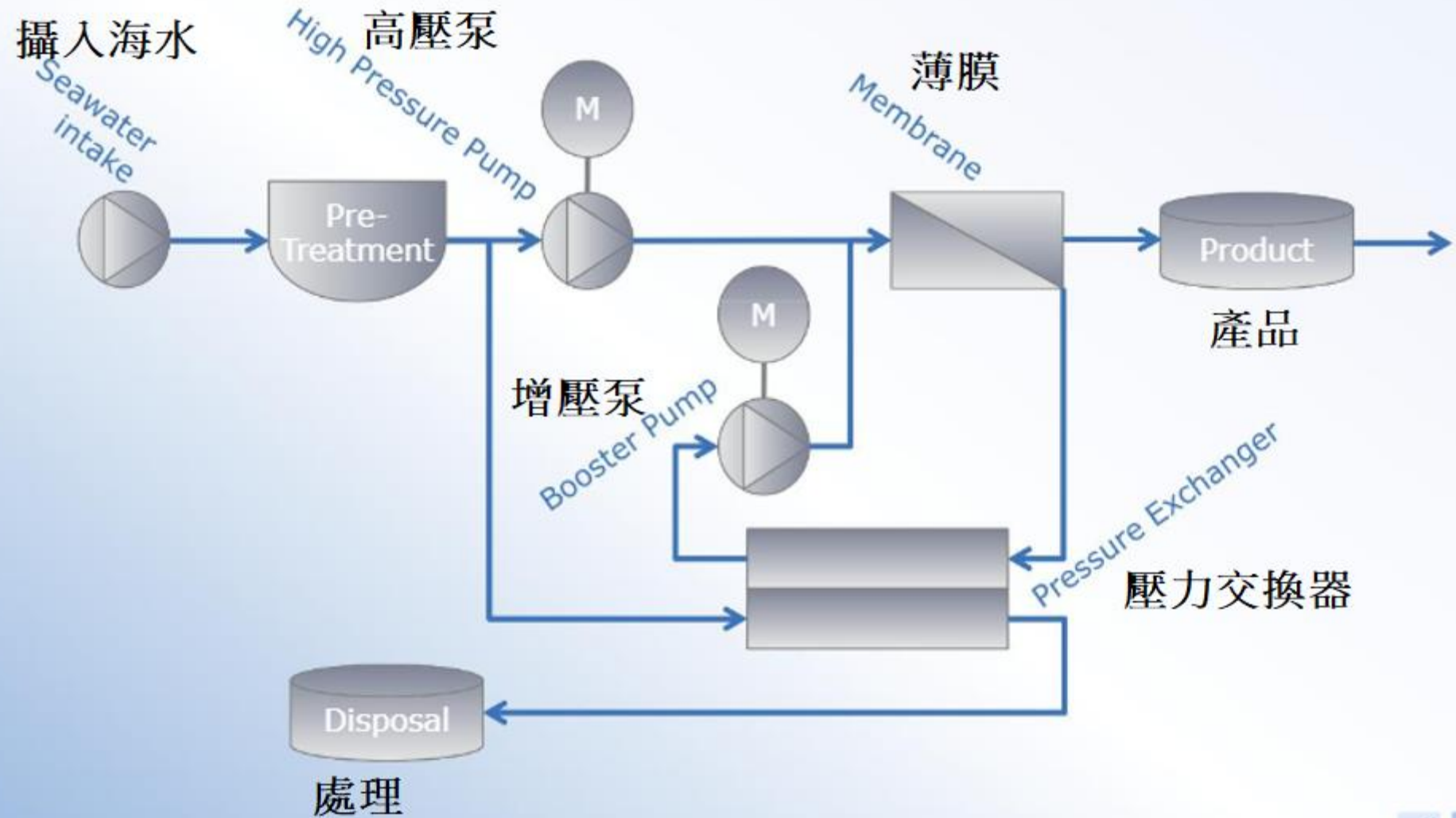

Seawater Desalination 海水淡化

阿曼，蘇哈爾

Oman, Sohar





- 3 high-pressure pumps type ROWA-HP 150x5
- 3 pelton turbines type ROWA-RT
- Q=367 m³/h @ 62 bar
  (1,615 gal/min @ 899 PSI)
- Delivered in 2004

Seawater Desalination 海水淡化

阿爾及利亞，拉封丹

Algeria, La Fontaine





- 9 high-pressure pumps type HP 100x10
- 9 pelton turbines type ROWA-RT
- Q=232 m³/h @ 72 bar
  (1,021 gal/min @ 1,044 PSI)
- Delivered in 2001

Seawater Desalination 海水淡化

西班牙，伊維薩島
Spain, Ibiza



- 3 high-pressure pumps type HK 15x5
- Q=313 m³/h @ 70 bar
  (1,378 gal/min @ 1,015 PSI)
- Delivered in 1992

Seawater Desalination 海水淡化

埃及，南西奈

Egypt, South Sinai



- 3 high-pressure pumps type HK 100x7
- 3 pelton turbines type ROWA-RT
- Q=135 m³/h @ 62 bar
  (594 gal/min @ 899 PSI)
- Delivered in 1996 (today 14 similar pumps operating in 5 different SWRO plants in Egypt)

Seawater Desalination 海水淡化

卡塔爾，珍珠

Qatar, Pearl



- 5 high-pressure pumps type ROWA-HP 200x2
- 810 m³/h @ 42 bar
  (3,566 gal/min @ 609 PSI)
- Delivered in 2008

Seawater Desalination 海水淡化

中國，天津

China, Tianjin



- 8 high-pressure pumps type ROWA-HP 150x3
  - 605 m³/h @ 70 bar (2,663 gal/min @ 1,015 PSI)
- 8 high-pressure booster pumps type ROWA-HPB 250-380
  - 796 m³/h @ 6 bar (3,504 gal/min @ 87 PSI)
- Delivered in 2008

Seawater Desalination 海水淡化

澳洲，布里斯本

Australia, Brisbane



- 5 high-pressure pumps type ROWA-HP 200x2
  - 833 m³/h @ 21 bar (3,667 gal/min @ 304 PSI)
- 5 high-pressure pumps type ROWA-HP 150x2
  - 400 m³/h @ 26 bar (1,761 gal/min @ 377 PSI)
- 5 high-pressure pumps type ROWA-HP 100x3
  - 162 m³/h @ 30 bar (713 gal/min @ 435 PSI)
- Delivered in 2010
- Online Condition Monitoring System

單段泵

TYPE MCV

- Nominal pressure up to 8 bar (120 PSI)
  壓力可達8 bar (120 PSI)
- Flow up to 12.500 m³/h (55,000 gal/min)
  流量可達12,500m3/h
- All main wetted parts are made of or non-metallic material (GRP)
  所有主要接液零件均由非金屬材料 (GRP) 製成
- High wear and corrosion resistance高耐磨和耐腐蝕
  - pH-Values 0-13
  - Maximum Density up to 1,700 g/l
- Mixed flow hydraulic混流液壓

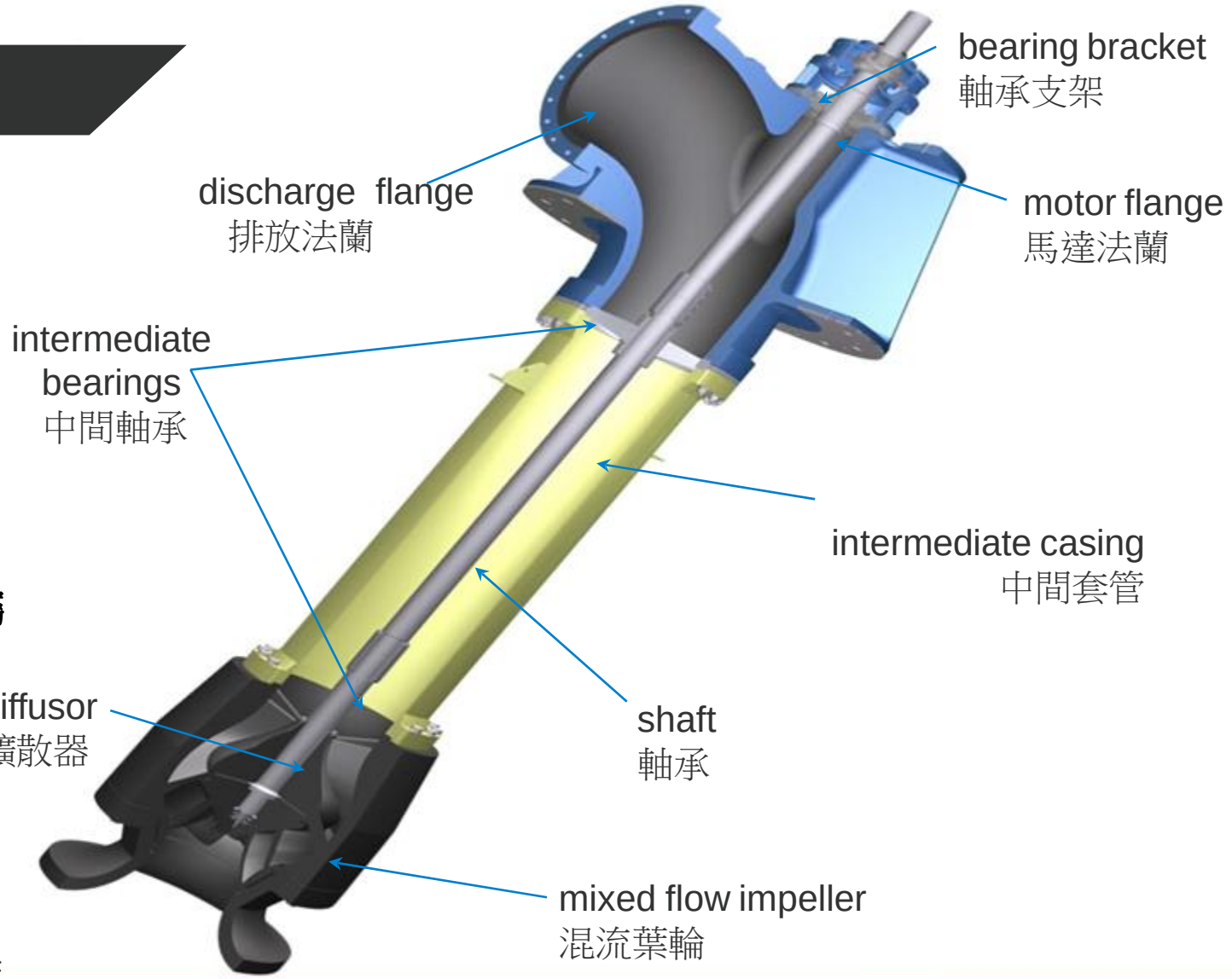

單段泵

DÜCHTING PUMPEN

TYPE WRX

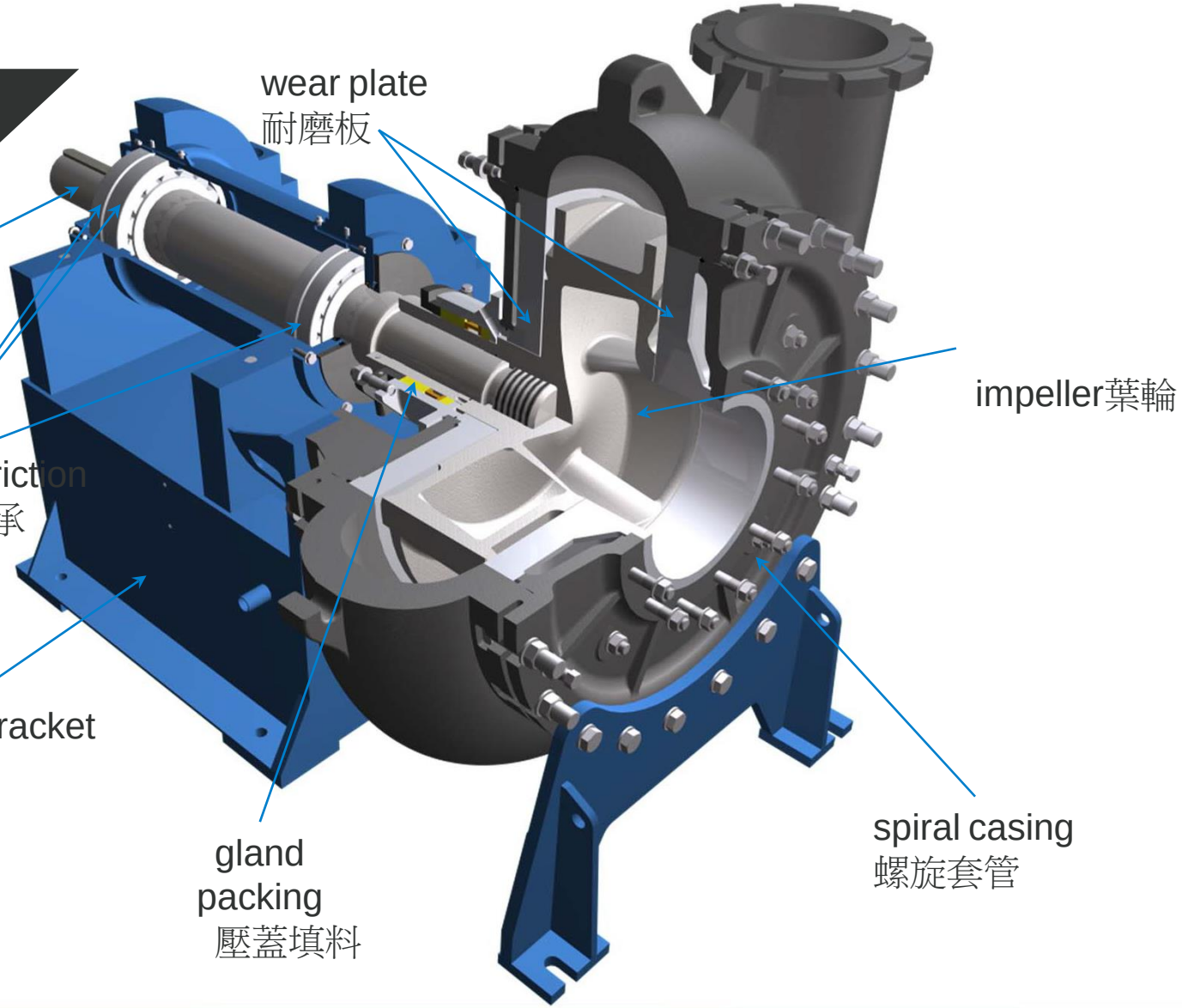

Company Profile 公司簡介

DÜCHTING PUMPEN

氣體淨化
Gas Cleaning



plant designer's business

海水淡化
Seawater Desalination



工業應用
Industrial Applications



operator's business

礦業
Mining



Single-Stage Pumps 單段泵

DÜCHTING PUMPEN

Type **MCC**





- Nominal pressure up to **6 bar** (87 PSI)
  壓力可達**6bar (87 PSI)**
- Flow up to **20.000 m³/h** (88,000 gal/min)
  流量可達**20,000 m3/h (88,000 gal/min)**
- All main wetted parts are made of **SICast**
  所有接液零件都由**SICast**製成
  高耐磨損及腐蝕
- High wear and corrosion resistance
  - pH-Values 0-12 **pH值 0-12**
  - Maximum Density up to 1,700 g/l
    最大密度可達1,700 g/l
- Horizontal and vertical arrangement
  水平或垂直排列
- Extendend Warranties available
  提供延長保修

Single-Stage Pumps 單段泵

Extended Warranty on MCCs 海水和石膏漿 MCCs 的延長保修

for seawater and gypsum slurry

- **10** years abrasion warranty on the **liner**

  10年襯裡磨損保修
- **6** years abrasion warranty on the **impeller**

  6年葉輪磨損保修
- **6** years abrasion warranty on the **wear plate**

  6年耐磨板磨損保修
- **Lifetime** anti-corrosion warranty on all SICast® -parts

  SICast零件永久耐腐蝕保修

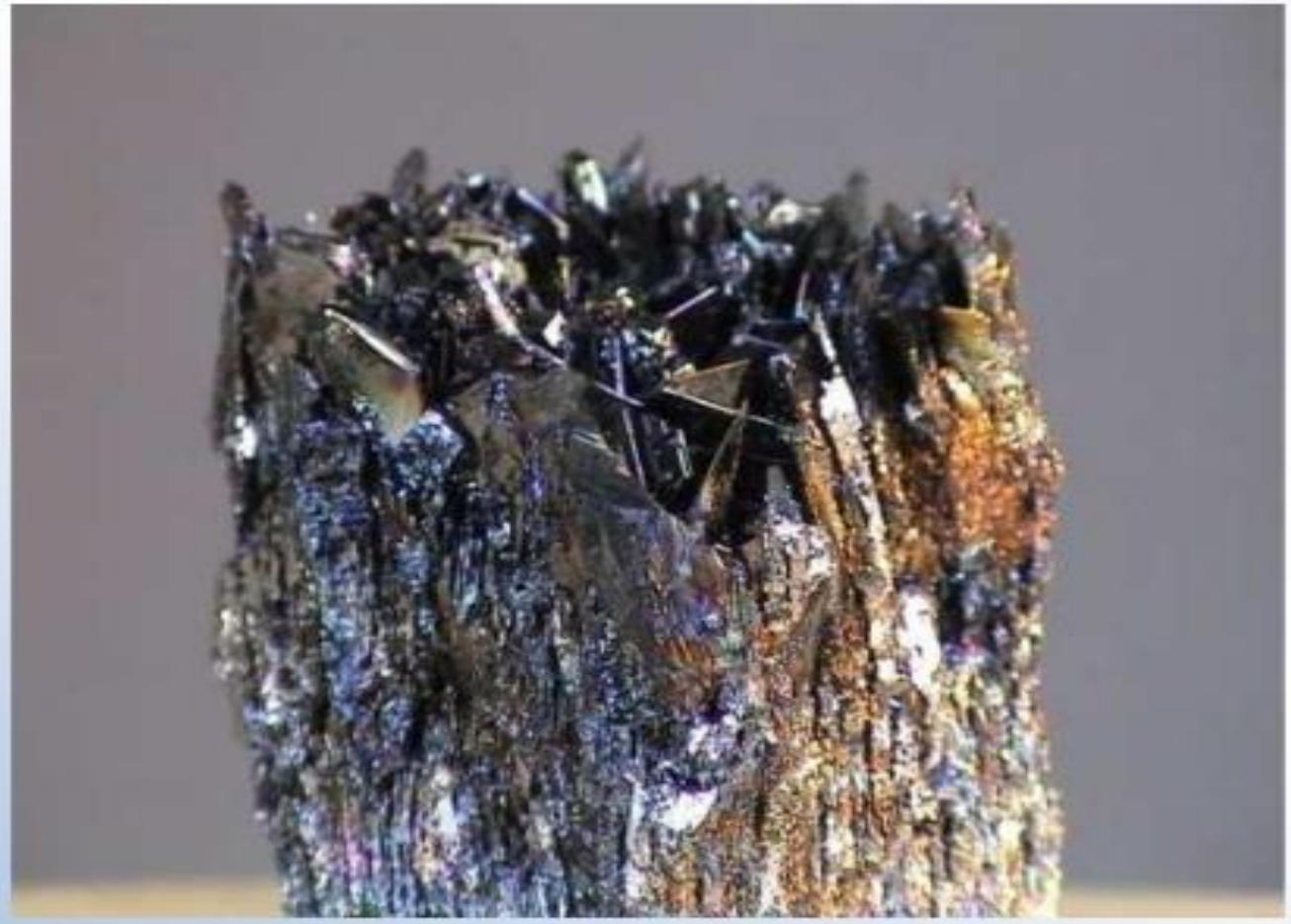

堅硬如鑽石

Hard as Diamond

The Material 材質

SICast

SICast與其他材料的比較

Comparison between SICast and other materials

耐磨性
Wear Resistance

耐腐蝕性
Corrosion Resistance



Special problem occurs with Erosion-Corrosion

The Material 材質

Wear in Combination of Flow Velocity 磨損結合流速

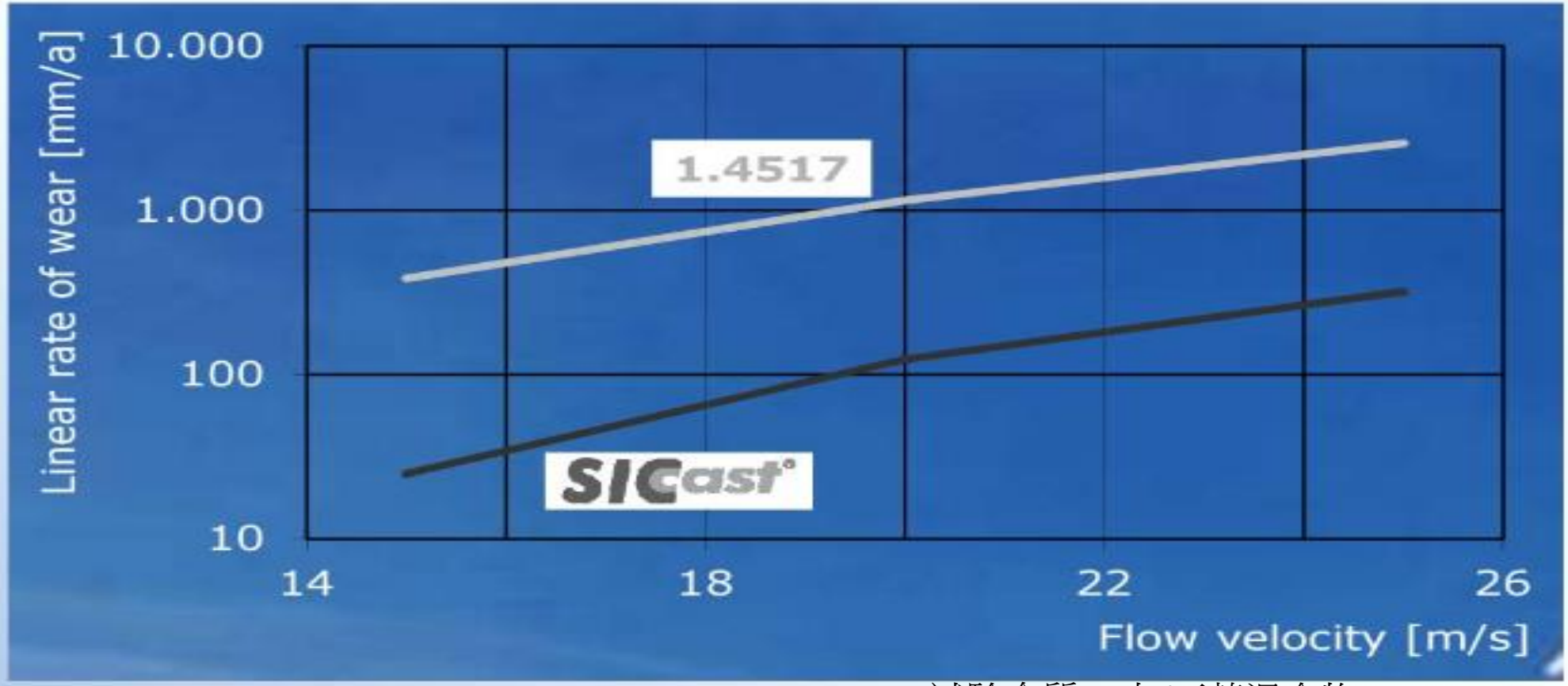

試驗介質：水-石英混合物
test medium: water-quartz-mixture
濃度 concentration: 30g/l
粒徑 particle size: ~23µm

The Material 材質

SICast®

Effects of the Erosion-Corrosion 侵蝕-腐蝕的影響

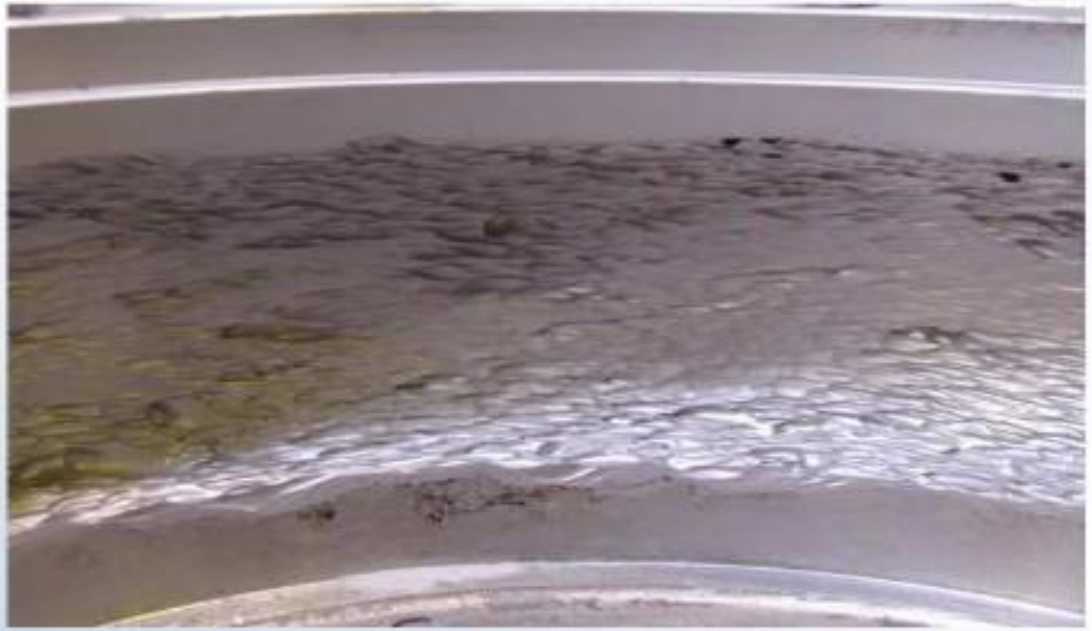



The Material 材質

SICast®

DUPLEX與SICast葉輪侵蝕-腐蝕的比較

Comparison of Erosion-Corrosion on DUPLEX and SICast® impellers

DUPLEX不鏽鋼

DUPLEX stainless steel



after **11.000h**
of operation

SICast®

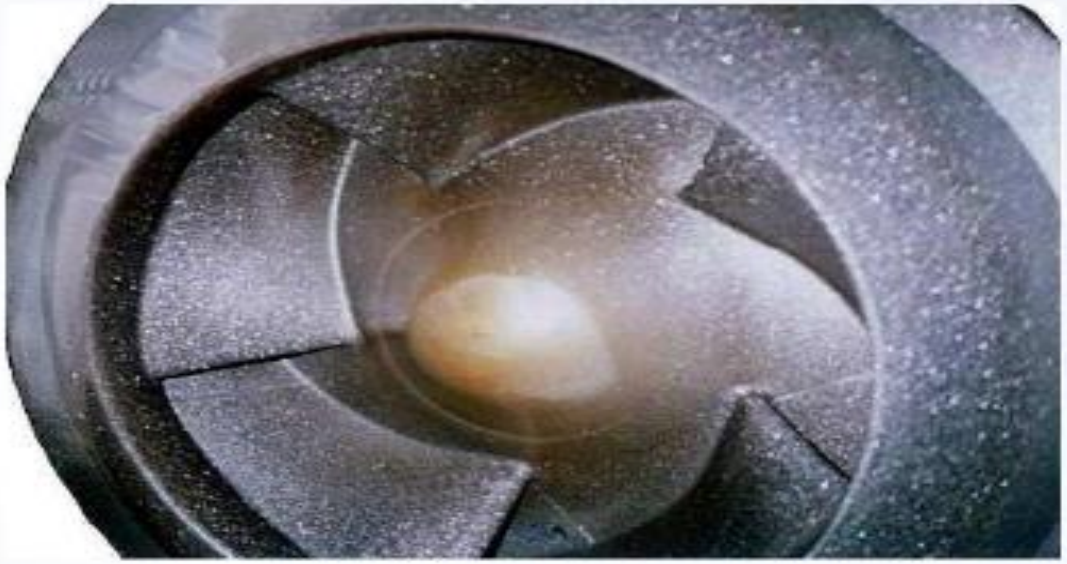

after **24.000h**
of operation

still in operation (85.000h)

Gas Cleaning 空氣淨化

西班牙，索托

Spain, Soto





- Single-stage pump type
  MCC 600-850
- 4.926 m³/h @ 22 m, 542 rpm
  (21,688 gal/min @ 31.9 PSI)
- Up to 30.000 ppm of chlorides
- supplied in 2006

Gas Cleaning 空氣淨化

德國，沃爾德

Germany, Voerde



- Single-stage pump type
  MCC 800-1100
- 8.800 m³/h @ 25,4 m, 495 rpm
  (38,745 gal/min @ 36.8 PSI)
- Up to 30.340 ppm of chlorides
- supplied in 2005

Gas Cleaning 空氣淨化

捷克, **Tusimice**

Czech Republic, Tusimice



- Single-stage pump type MCC 900-1180
- 11.000 m³/h @ 25,3 m, 424 rpm (48,431 gal/min @ 36.7 PSI)
- Up to 30.000 ppm of chlorides
- supplied in 2007

Gas Cleaning 空氣淨化

美國, KU Brown

USA, KU Brown



- Single-stage pump type
  MCC 1000-1250
- 15.352 m³/h @ 25,3 m, 388 rpm
  (67,592 gal/min @ 36.7 PSI)
- Up to 10.000 ppm of chlorides
- supplied in 2006